Hydrogel thermal buffer

AN-HYD-001
RECHARGE AT IDLE, ABSORB THE PEAK
HOW IT WORKS · 1 / 2

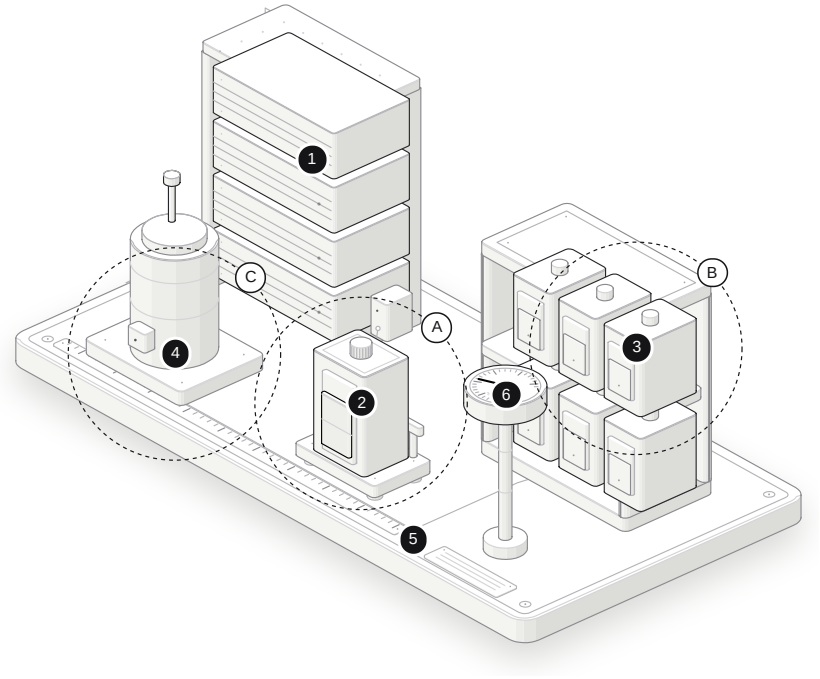

How does a data center ride out a heat spike without bigger chillers?

Beside the rack sits a bank of hydrogel cartridges. At low compute load the gel takes up water from the condensate loop and swells: that is the recharge. When a training run spikes the load, the active cartridge gives its water back and absorbs the heat, flattening the peak the chillers see. The gel level in the window is the stored cooling, and the dial shows what the aisle feels.

38.0 °C UNBUFFERED PEAK (MODEL)	30.3 °C BUFFERED PEAK (MODEL)
5.4 °C HOTSPOT COOLING, 2026 STUDY	8+ h REPORTED COOLING DURATION

PARTS

01 **Server rack**
The heat source: four units whose load you drive.

02 **Active cartridge**
In service on its swap dolly; its gel level is the stored cooling.

03 **Spare cartridge bank**
Six charged cartridges in their cabinet, ready to swap in.

04 **Condensate tank**
Captured condensate; the recharge reservoir with its float gauge.

05 **Recharge loop**
Feed and return lines carrying condensate between tank, bank and rack.

06 **Aisle thermometer**
Reads the aisle air temperature the gel is holding down.

CLOSE-UPS

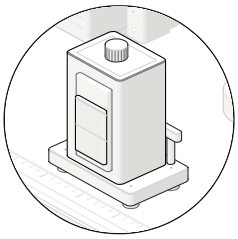

(A) **The gel window**
The bright level in the cartridge window is the stored cooling; watch it fall as the peak is absorbed.

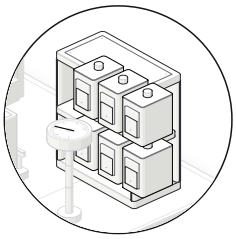

(B) **The bank**
Six spare cartridges wait charged in the cabinet behind the active one.

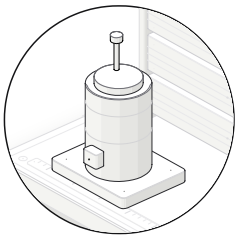

(C) **The condensate tank**
Condensate captured from the cooling plant is the recharge water; the float gauge shows how much is held.

How it works

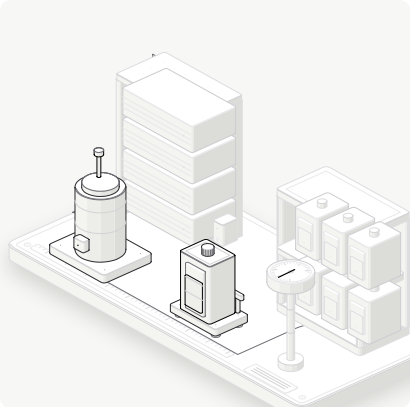

01

Idle: the gel recharges

Below 38% load the buffer takes up water from the condensate loop and the gel level climbs back toward full.

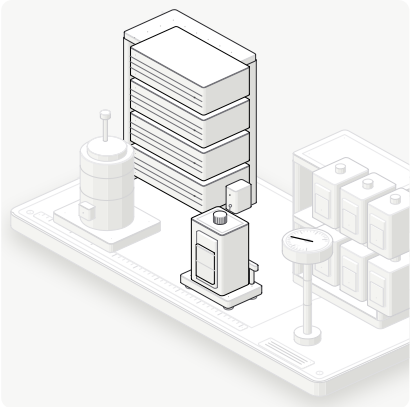

02

The peak arrives

At full load the unbuffered aisle would run to 38.0 °C. The active cartridge starts giving its water back.

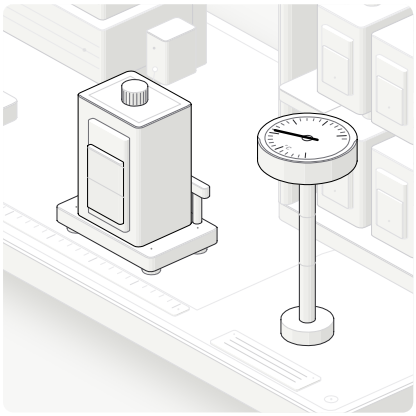

03

The peak is absorbed

While gel remains, the buffer absorbs 55% of the rise: the aisle steadies near 30 °C instead of 38 °C.

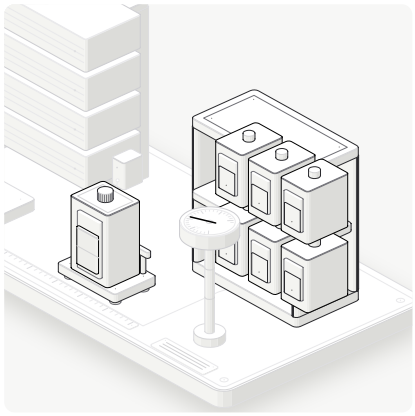

04

Swap and recharge

A spent cartridge rolls out on its dolly and a charged spare from the bank takes its place; the cycle repeats.

WHY A BATTERY FOR HEAT?

Data-center load is spiky: a training run can push a rack far past its average for minutes to hours. Chillers sized for the peak sit idle the rest of the time. A thermal buffer that charges at idle and discharges into the peak lets the cooling plant follow the average instead, which is the paper's whole argument for putting hydrogel beside the rack.

SPECIFICATION

Buffer	Hydrogel cartridges, one active + six spare	Duty	Peak shaving beside the rack, not whole-room cooling
Peak absorbed	55% of the load rise while gel remains (figure model)	Status	Concept figure from the working paper; not measured product data
Recharge	Below 38% load, from captured condensate		