Hydrogel thermal buffer: a battery for heat

AN-HYD-001

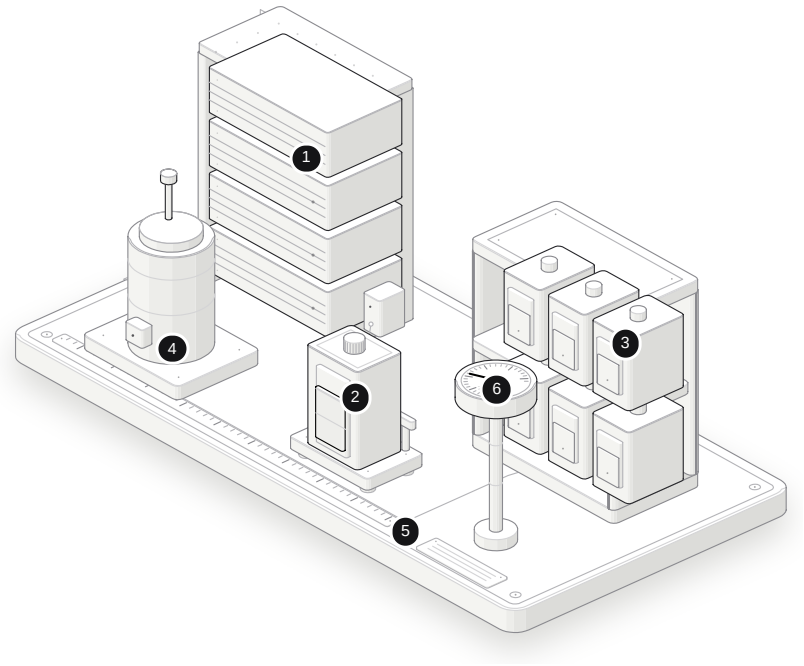

PARTS

01 Server rack
02 Active cartridge
03 Spare cartridge bank
04 Condensate tank
05 Recharge loop
06 Aisle thermometer

SPECIFICATION

Buffer	Hydrogel cartridges, one active + six spare
Peak absorbed	55% of the load rise while gel remains (figure model)
Recharge	Below 38% load, from captured condensate
Duty	Peak shaving beside the rack, not whole-room cooling
Status	Concept figure from the working paper; not measured product data

ABSORBING A PEAK

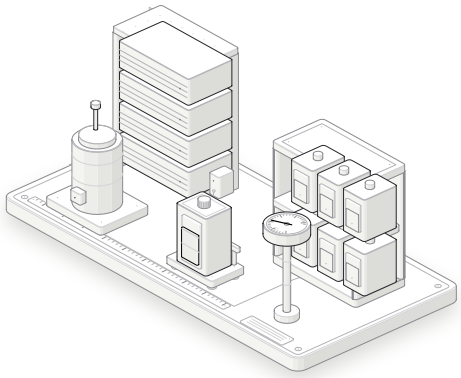

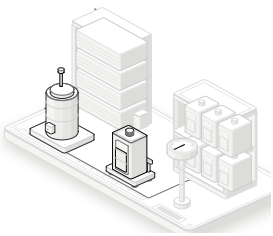

01
Idle: the gel recharges

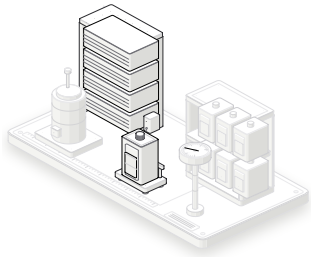

02
The peak arrives

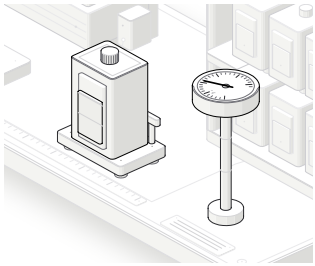

03
The peak is absorbed

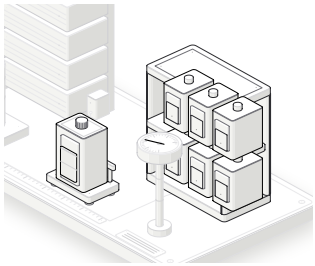

04
Swap and recharge