Hydrogel thermal buffer

AN-HYD-001
HOW IT WORKS
RECHARGE AT IDLE, ABSORB
THE PEAK

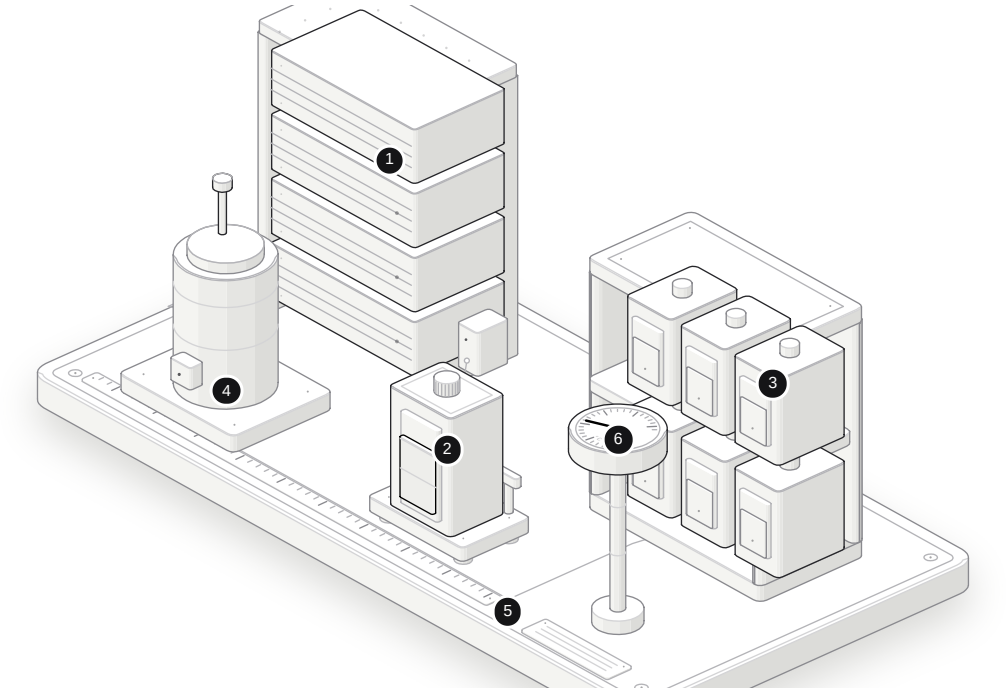

How does a data center ride out a heat spike without bigger chillers?

Beside the rack sits a bank of hydrogel cartridges. At low compute load the gel takes up water from the condensate loop and swells: that is the recharge. When a training run spikes the load, the active cartridge gives its water back and absorbs the heat, flattening the peak the chillers see. The gel level in the window is the stored cooling, and the dial shows what the aisle feels.

38.0 °C
UNBUFFERED PEAK (MODEL)

30.3 °C
BUFFERED PEAK (MODEL)

01 **Server rack**
The heat source: four units whose load you drive.

02 **Active cartridge**
In service on its swap dolly; its gel level is the stored cooling.

03 **Spare cartridge bank**
Six charged cartridges in their cabinet, ready to swap in.

04 **Condensate tank**
Captured condensate; the recharge reservoir with its float gauge.

05 **Recharge loop**
Feed and return lines carrying condensate between tank, bank and rack.

06 **Aisle thermometer**
Reads the aisle air temperature the gel is holding down.